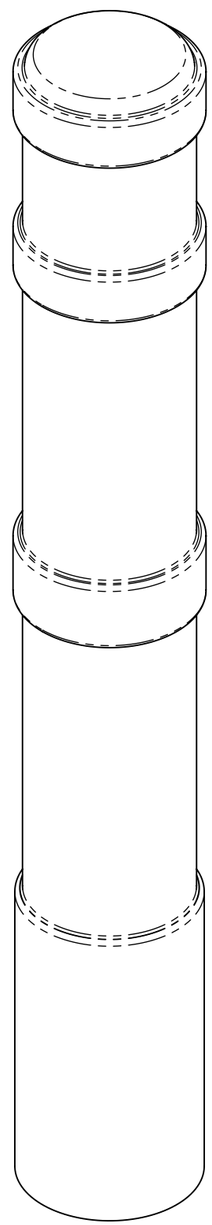

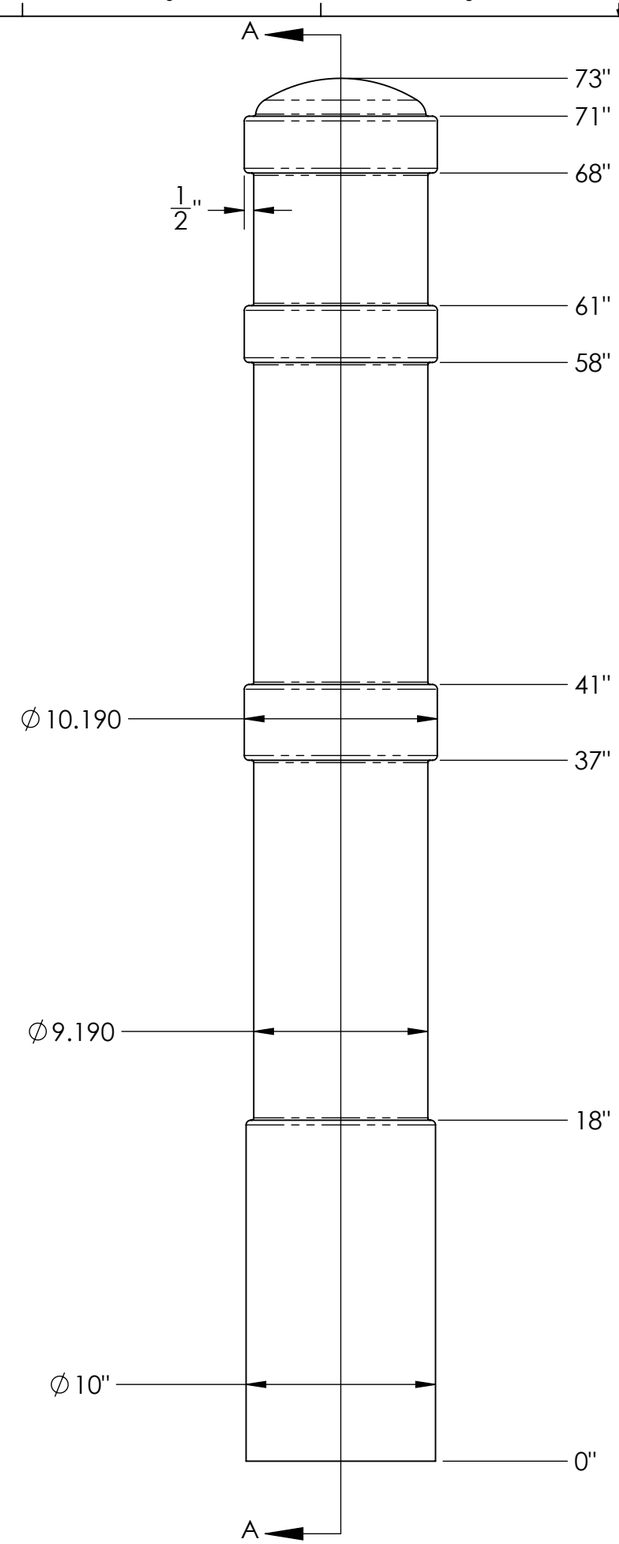

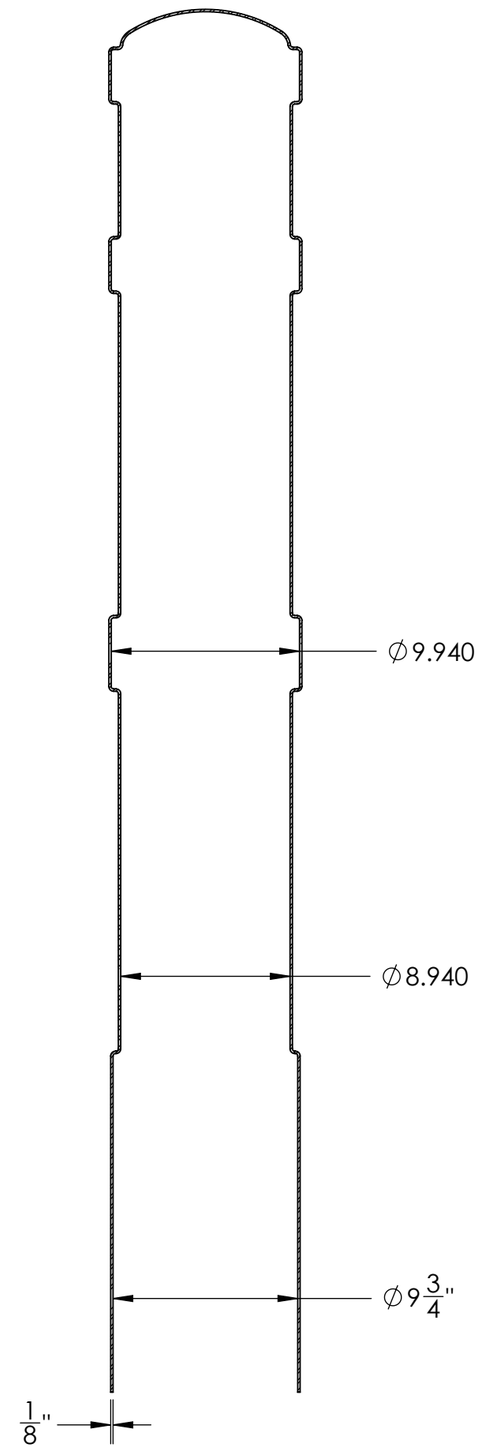

SECTION A-A

SPECIFICATIONS

DIMENSIONS AND DETAILS

- TBD LARGEST OD
- TBD SMALLEST ID
- 73" TALL
- 2X FOAM INSTALLATION STRIPS

MATERIAL

- MICROTHENE TM MP635662 LINEAR LOW DENSITY POLYETHYLENE HEXANE COPOLYMER. LDPE RESIN IS TAILORED FOR ROTATIONALLY MOLDED LARGE HOLLOW OBJECTS THAT REQUIRE IMPACT STRENGTH, WARP RESISTANCE, AND STRESS CRACK RESISTANCE.
- UV STABILIZER PACKAGE IS ADDED WITH THE LDPE.

INSTALLATION

- CRISS-CROSS THE FOAM STRIPS OVER THE TOP OF THE BOLLARD.
- SLIDE THE POST GUARD COVER OVER THE FOAM STRIPS AND THE BOLLARD.

TOPGARD Construction Products
15310 ENDEAVOR DR
SUITE 200
NOBELSVILLE, IN 46060
317-917-2240

DRAWN	09/22/22	TITLE:
RELEASED	TBD	ROYAL DECORATIVE BOLLARD COVER
REVISED	TBD	
UNLESS OTHERWISE SPECFIEID, DIMENSIONS AND TOLERANCES ARE IN INCHES AND ARE ± .125"		

SIZE	DWG. NO.	REV
B	R1	0
	SCALE: NONE	SH 1